User manual

VERTI-CORE III 1600-2100

Translation of the original user manual



2640 English 912.120.300 EN

Kwekerijweg 8 | 3709JA | Zeist | The Netherlands |
T: +31 (0)306 933 227
E: redexim@redexim.com
W: www.redexim.com

EU – DECLARATION OF CONFORMITY

We,

Redexim Handel- en Exploitatie Maatschappij B.V.

Kwekerijweg 8

3709 JA Zeist, The Netherlands

declare that this "EU - DECLARATION OF CONFORMITY" is issued under our sole responsibility and belongs to the following product:

VERTI-CORE WITH MACHINE NUMBER AS INDICATED ON THE MACHINE AND IN THIS MANUAL,

to which this declaration refers, complies with stipulation of:

2006/42/EC Machinery Directive

and with the standards:

- **ISO 12100-1:2010** Safety of machinery - General principles for design - Risk assessment and risk reduction
- **ISO 13857:2019** Safety of machinery - Safety distances to prevent hazard zones being reached by upper and lower limbs
- **ISO 4254-1:2015** Agricultural machinery - Safety - Part 1: General requirements
- **ISO 4254-5:2018** Agricultural machinery - Safety - Part 5: Power-driven soil-working machines

Zeist, 03-01-2022

C.H.G. de Bree

Redexim Handel- en Exploitatie Maatschappij B.V.

UK – DECLARATION OF CONFORMITY

We,

Redexim Handel- en Exploitatie Maatschappij B.V.

Kwekerijweg 8

3709 JA Zeist, The Netherlands

declare that this "UK - DECLARATION OF CONFORMITY" is issued under our sole responsibility and belongs to the following product:

VERTI-CORE WITH MACHINE NUMBER AS INDICATED ON THE MACHINE AND IN THIS MANUAL,

to which this declaration refers, complies with stipulation of:

S.I. 2008 No. 1597 HEALTH AND SAFETY The Supply of Machinery (Safety) Regulations 2008

and with the standards:

- **ISO 12100-1:2010** Safety of machinery - General principles for design - Risk assessment and risk reduction
- **ISO 13857:2019** Safety of machinery - Safety distances to prevent hazard zones being reached by upper and lower limbs
- **ISO 4254-1:2015** Agricultural machinery - Safety - Part 1: General requirements
- **ISO 4254-5:2018** Agricultural machinery - Safety - Part 5: Power-driven soil-working machines

Zeist, 03-01-2022

C.H.G. de Bree

Redexim Handel- en Exploitatie Maatschappij B.V.

PREFACE

Congratulations on the purchase of your Verti-Core III. In order to ensure safe operation and a long life span of this Verti-Core III it is crucial that you read and fully understand this user manual.
Without full knowledge of the contents of this manual, you will not be able to safely operate this machine.

The Verti-Core III is not a stand-alone machine. It is the user's responsibility to use a suitable tractor. The user will also have to assess the tractor/ Verti-Core III combination's safety aspects, such as noise levels, user instructions and risk analysis.

On the following page you will find general safety instructions. Every user must be acquainted with these instructions and apply them at all times. Below you will find a registration card, which you are asked to return to us in order for us to be able to handle any future claims.

This User Manual provides a wide range of instructions which are numbered in a specific order. You should always work in that order. If an instruction is accompanied by an ⚠ icon, it is a safety instruction. If an ☞ icon is used, the information in question is a tip and/or note.

All information and technical specifications provided at the moment that this document is published are the most recent ones. Design specifications may be changed without prior notice.

This document is a translation of the original operating instructions.
Upon request, the original operating instructions are available in Dutch.

WARRANTY CONDITIONS

THIS VERTI-CORE III COMES WITH A WARRANTY AGAINST DEFECTS IN MATERIALS.
THIS WARRANTY IS VALID FOR A TERM OF 12 MONTHS FROM THE PURCHASE DATE.
VERTI-CORE III WARRANTIES ARE SUBJECT TO THE "GENERAL CONDITIONS FOR SUPPLY OF PLANT AND MACHINERY FOR EXPORT, NUMBER 188", AS PUBLISHED UNDER THE AUSPICES OF THE UNITED NATIONS ECONOMIC COMMISSION FOR EUROPE.

REGISTRATION CARD

Complete the following table for your records:

Machine serial number	
Dealer name	
Purchase date	
Notes	

! SAFETY INSTRUCTIONS !

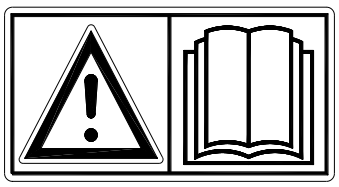

Fig. 1

The Verti-Core III is designed to facilitate safe operation. But safe operation is only possible if all safety instructions described in this manual are observed without fail.
Read and understand (Fig. 1) the manual prior to working with the Verti-Core III.
Failure to use the machine as described in the manual can lead to a serious risk of physical injury and/or damage to the Verti-Core III.

(1) The Verti-Core III is exclusively intended for the treatment of lawns or areas where grass should be growing.
Any other use will constitute improper use. The manufacturer will not assume any liability for any damage ensuing from improper use. Any risks involved in such improper use will be the full responsibility of the user.
Proper use also includes the carrying out of operating, maintenance and repair instructions given by the manufacturer.

Inspect the area you will be treating prior to using the Verti-Core III. Remove any loose obstacles and avoid uneven areas.

(2) The Verti-Core III has been built in line with the latest technological advances to enable safe use.

Use, maintenance or repairs of the machine by untrained persons can give rise to a risk of injury to the user and any bystanders. **Avoid this at all times!**

Always use the Verti-Core III in combination with a suitable tractor as described in the technical data.

(3) All persons assigned by the proprietor to operate, maintain or repair the Verti-Core III must first have fully read and understood the user manual, and, in particular, the **Safety Instructions** chapter.

The user is responsible for a **safe Tractor/Verti-Core III combination. The combination must be assessed** for noise levels, safety, risk and user-friendliness. User instructions for the combination will also have to be drawn up.

(4) It is **obligatory** for the user to check the Verti-Core III for any **visible damage and defects** prior to using it.
Changes to the Verti-Core III (including its functioning) that negatively affect safety, must be remedied/undone right away.
Making any changes or additions to the Verti-Core III (except for those approved by the manufacturer) is not permitted for reasons of safety.

If any **modifications** have been made to the Verti-Core III, its current CE mark will lapse, and the party that implemented the modifications must secure a new **CE mark himself**.

Always check the Verti-Core III for loose nuts/bolts/parts prior to use.

Check any possible hydraulic hoses regularly, and replace them when they are damaged or showing signs of excessive wear. Replacement hoses must meet the technical requirements specified by the manufacturer.

The hydraulic system, if installed, must **always** be depressurized prior to working on it.

The Verti-Core III must **NEVER** be used when protective covers and safety stickers are missing.

NEVER crawl under the Verti-Core III.
If necessary, tip the Verti-Core III over.

NEVER get off the tractor when the engine is still running.

The Verti-Core III must always be secured against sagging/rolling away/sliding during maintenance, setup and repair work.

Always switch off the tractor engine and remove the key from the ignition, and disengage the PTO prior to any maintenance, setup and repair work. (Fig. 2)

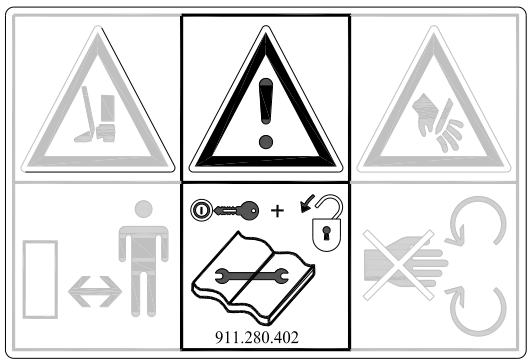

Fig. 2

Only use original Verti-Core III parts during maintenance or repair work to safeguard the safety of both machine and user.

Repair work on the Verti-Core III must only be carried out by competent and authorized technical staff.

Keep a maintenance log.

(5) Apart from the instructions from this user manual, general occupational health and safety instructions also have to be observed.

When going out onto public roads with the machine, relevant traffic regulations will also apply.

Transporting people is not permitted!

Do not use the Verti-Core III in the dark, in heavy rain/strong winds, or on slopes above 20 degrees.

(6) Prior to working with the machine, all people who will be operating the Verti-Core III must be acquainted with all its functions and control elements.

Hook up the Verti-Core III to the tractor as per the instructions **(Danger of physical injury!)** Make sure you have good visibility, both close by and of the entire surroundings, prior to setting off.

There are safety stickers on both sides of the Verti-Core III (Fig. 3,4,5) as well as on the back (Fig. 6), which all have the same meaning. These safety stickers must always be visible and readable, and they must be replaced without delay whenever they are damaged.

Keep all people out of the danger area of the Verti-Core III during operation, because they would otherwise be subjected to serious danger of personal injury caused by moving parts. (Fig. 3)

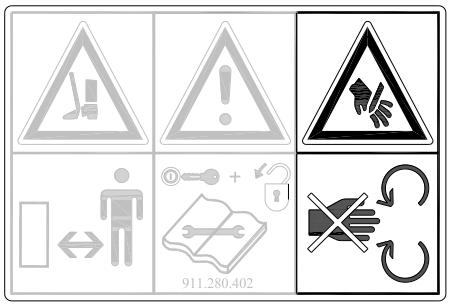

Fig. 3

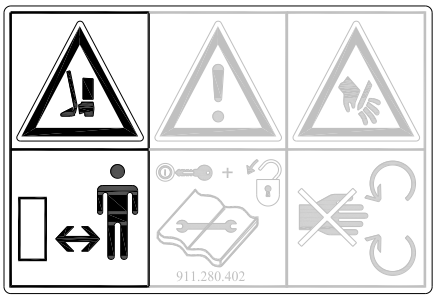

Fig. 4

Maintain a distance of at least 4 metres! (Fig. 4)

The back cover has to remain closed at all time and be damage-free during operation of the machine! (Fig. 5)

Beware of body parts getting caught when opening the back cover! (Fig. 5a)

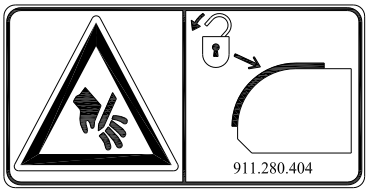

Fig. 5



Fig. 5a

Check the permitted lifting power of the tractor.

Wear appropriate clothing. Wear sturdy steel-capped shoes, full-length trousers, long hair tied back and no loose garments.

(7) Location of safety stickers. (Fig. 6)

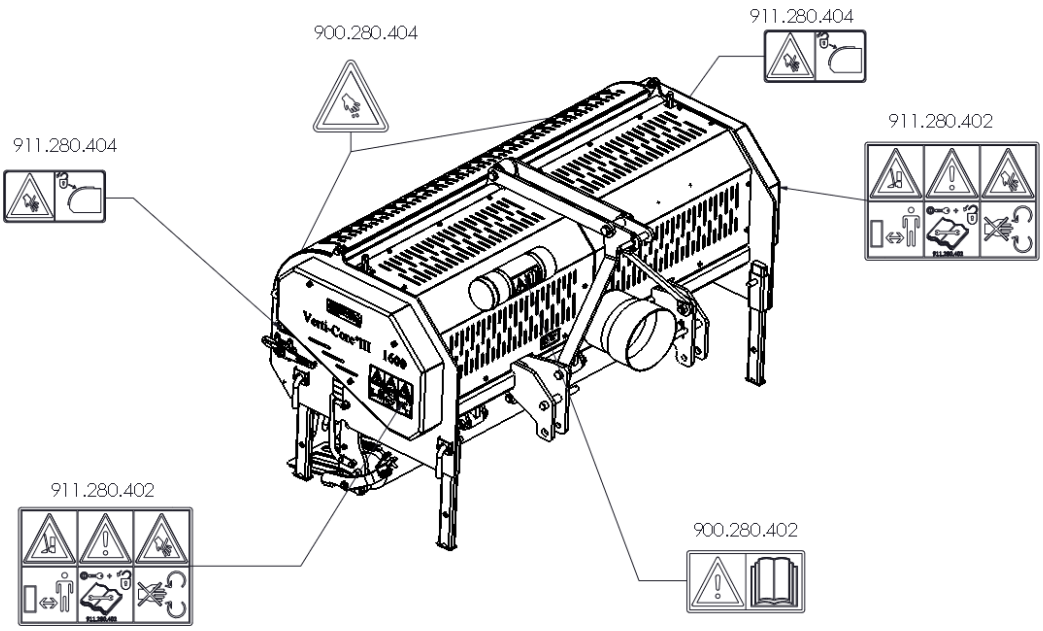

Fig. 6

⚠**All safety stickers have to remain on the machine at all times - and be fully understood by the operator.**

Used oil is harmful to the environment; dispose of it in line with local regulations.

TABLE OF CONTENTS

EU – DECLARATION OF CONFORMITY 2
UK – DECLARATION OF CONFORMITY 3
PREFACE 4
WARRANTY CONDITIONS 4
REGISTRATION CARD 4
! SAFETY INSTRUCTIONS ! 5
1.0 TECHNICAL DATA 10
2.0 TAKING THE MACHINE OFF THE PALLET 11
3.0 THE PTO 12
3.1 PTO LENGTH 12
3.2 PTO USE 13
4.0 CONNECTING TO THE TRACTOR 14
5.0 SETTING THE WORKING DEPTH 15
6.0 DRIVING SPEED 16
7.0 STARTING PROCEDURE 16
8.0 USING THE VERTI-CORE III 17
9.0 TRANSPORTING THE VERTI-CORE III 18
10.0 DISCONNECTING THE VERTI-CORE III 19
11.0 TROUBLESHOOTING 20
12.0 MAINTENANCE 21
12.1 SPECIFIC BEARING REPLENISHMENT SCHEME 21
13.0 LUBRICATION POINTS 22
14.0 V-BELT TENSIONING 23
15.0 TECHNICAL INFORMATION 24
15.1 REPLACING A CRANK/CONNECTING ROD BEARING 24
15.2 RELEASING CRANKSHAFT TENSION 25
15.3 TIMING AND TORQUES 25
16.0 OPTIONS 27
16.1 HOLLOW TINES 27
16.2 TURF HOLD DOWN FINGERS 28
16.3 WINDROW KIT 28

1.0 TECHNICAL DATA

Model	1600	2100
Working width	1.6 m (63”)	2.1mtr (83”)
Working depth	0mm - 100mm (0”-4”)	
Tractor speed measured at 540 rpm on power take-off (PTO) shaft Hole spacing 55 mm (2.2”) Hole spacing 110 mm (4.3”)	 Up to 1.8 km/h (1.2 mph) Up to 3.6 km/h (2.4 mph)	
Weight	846 Kg (1865 lbs)	1022 Kg (2253 lbs)
Recommendations for tractor	45 HP with minimum lifting capacity of 1000 Kg (2205lbs)	55 HP with minimum lifting capacity of 1250 Kg (2755lbs)
Tine spacing	55 mm (2.2”) @ 19mm (0.75”) holes 68,75 mm (2.7”) @ 22mm (0.87”) holes	
Hole spacing in driving direction	25 – 110 mm (1” – 4.3”)	
Maximum capacity Hole spacing 55 mm (2.2”) Hole spacing 110mm (4.3“)	 Up to 2880 m²/h (31000 ft²/h) Up to 5760 m²/h (62000 ft²/h)	 Up to 3780 m²/h (40688 ft²/h) Up to 7560 m²/h (81375 ft²/h)
Shipment dimensions	L x W x H 1960 x 1040 x 1110 mm 77” x 41” x 43.7”	L x W x H 2581 x 1100 x 1080 mm 102” x 43.3” x 42.5”
3-point hitch	CAT. 1	
Gearbox oil	80W-90 GL5 1.2L (0.32 Gallon)	
Lubricant	EP 2	
Standard parts	-Set hollow tines 13/16” with ¾” mounting -Roller. -Tool case with tools and user manual. -PTO shaft. -Turf hold down fingers	Set hollow tines 13/16” with ¾” mounting -Roller. -Tool case with tools and user manual. -PTO shaft. -Turf hold down fingers
Options	-7/8” Tine holders with 4 tines	

2.0 TAKING THE MACHINE OFF THE PALLET

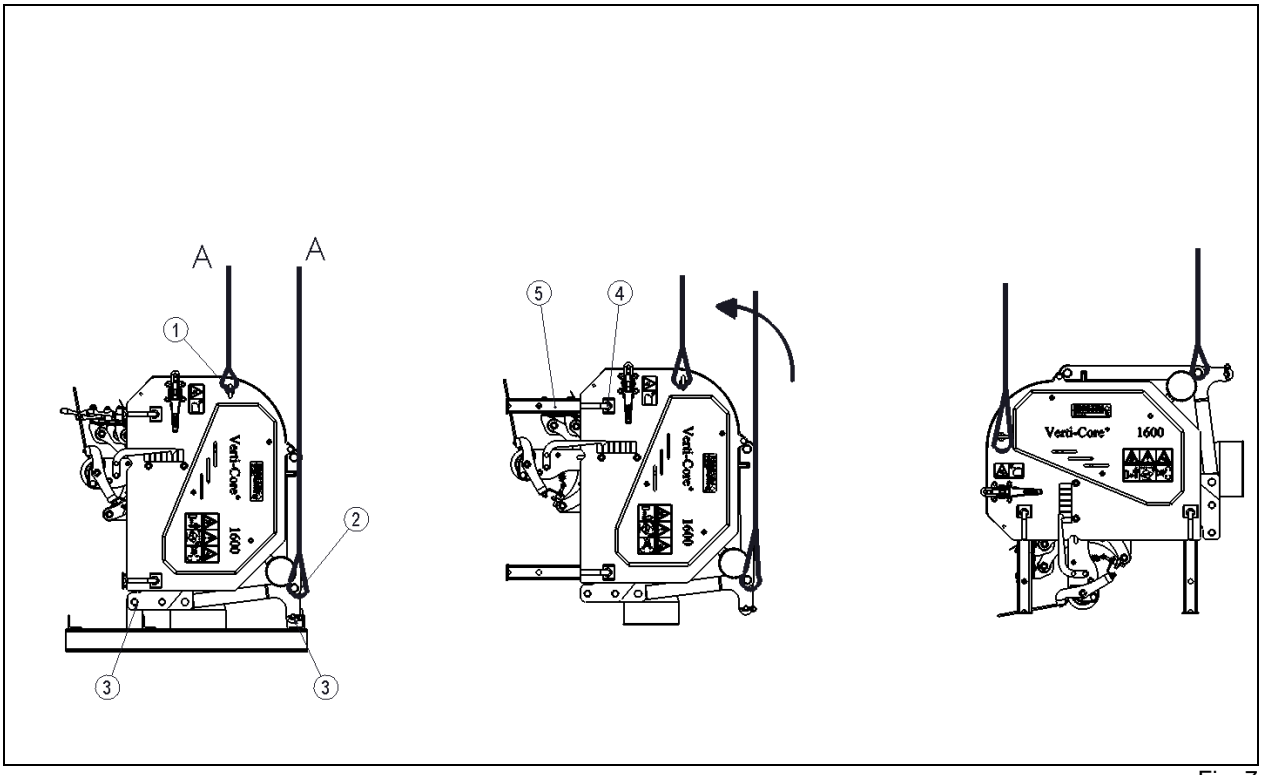

Fig. 7

The machine is placed on the pallet vertically. Perform the following actions to remove the machine from the pallet and place it horizontally on the floor (see Fig.7):

⚠ !! NEVER CRAWL UNDER THE MACHINE !!

1. Attach a cable to the lifting points (1) on both sides of the machine, and to the top of the 3-point hitch (2) on the front.

   ⚠ Verti-Core III 1600 Make sure the cable/crane/lift has the capacity to lift at least 1700 kg (3750 lbs).

   ⚠ Verti-Core III 2100 Make sure the cable/crane/lift has the capacity to lift at least 2100 kg (4630 lbs).

2. Lift the machine, including the pallet, about 50 mm (2”) off the ground (A).
3. Remove the pallet by removing the bottom 3-point pins (4).
4. Pull the pallet from under the machine (B).
5. Turn de locking pins (4) half a rotation and remove them. Pull out the legs (5) and replace the locking pins.
6. Now slowly rotate the machine horizontally.
7. Lower the machine in a controlled and slow fashion until it is fully on the ground.

   ⚠ !! STAY CLEAR OF THE MACHINE, IT CAN SLIDE !!

3.0 THE PTO

The PTO is an essential part of the machine. This part drives the machine from the tractor, and ensures safe use of the machine, providing it has been maintained and installed correctly. The PTO has its own CE certification. Read the PTO manual, which you will find on the PTO itself.
For specific adjustments see the details given on the PTO page in the parts book. Do not exceed the given values. This can lead to an unsafe situation and overload the machine, resulting in damage.

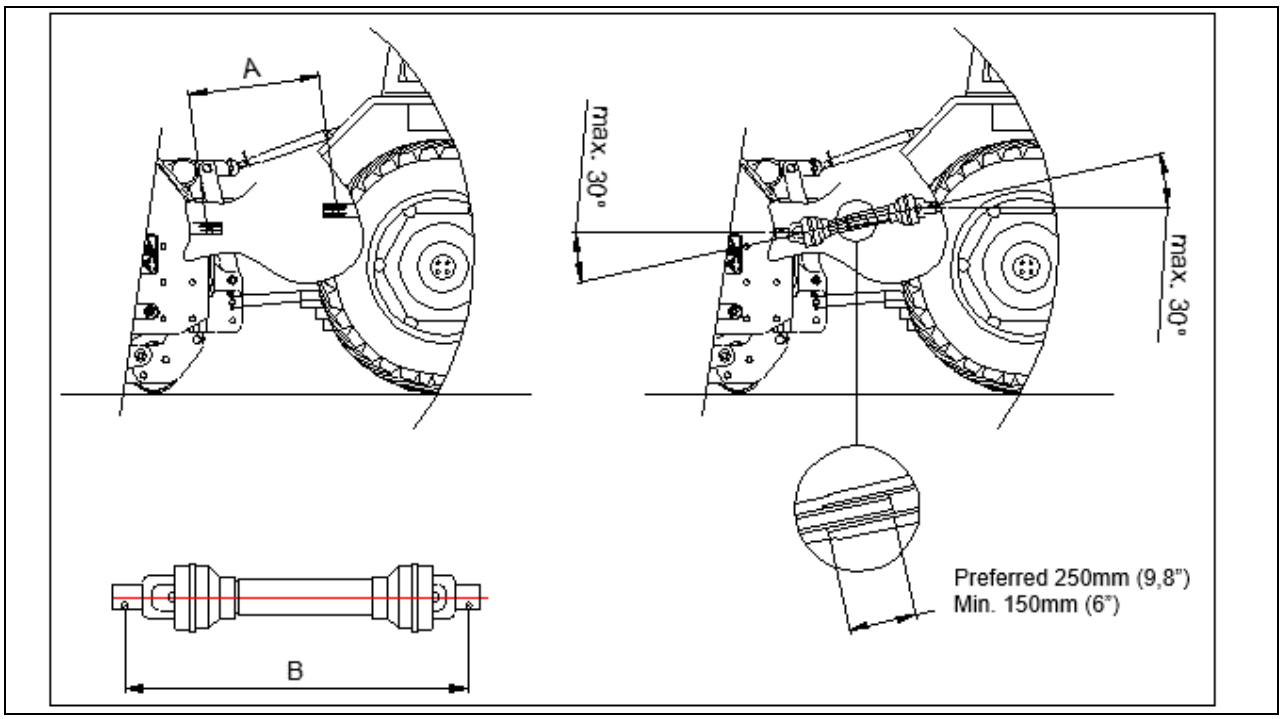

Fig. 8

3.1 PTO LENGTH

The length of the PTO is crucial. If it is too long, the tractor and/or Verti-Core III can be damaged. (Fig 8) The tube overlap length is preferred at 250mm (9.8") but can be reduced to a minimum of 150mm (6"). An overlap lower than this value is not desirable with possible damage to the PTO as a result.

⚠ **!! PTO length will change when the machine is lifted or used on a different tractor!!**

In order to attain the right PTO length, when one has been purchased new or was previously used on another tractor, you will have to do the following:

1. Couple the Verti-Core III to the tractor as described in Chapter 4.0.
2. ⚠ **!! Switch off the tractor and make sure the tractor is secure and cannot start moving !!**
3. Lower the Verti-Core III onto the floor until it is resting on the front and back rollers.
4. Measure the distance A between the PTO connection of the tractor and that of the Verti-Core III, from groove to groove.
5. Measure length B of the PTO in its shortest position, from locking pin to locking bolt.
6. Split the PTO in two, and remove the protective cover from both ends.
7. Both the ends of the sleeves and of the safety covers have to be shortened:
   (B-A) + 125 mm (4,9") preferred.
   (B-A) + 75 mm (3") minimum.
8. De-burr all parts, use some grease and assemble the parts.
9. Mount the PTO on the Verti-Core III side.
10. Couple the other end of the PTO to the tractor.
11. Check sleeve overlap.

⚠ **!! Never use the machine with a damaged PTO protection cover; Replace it first!!**

3.2 PTO USE

Proper use of the PTO requires checking the following items:

1. While the Verti-Core III is operating, the angle of the pivoting points must never exceed 30 degrees.
2. Pivoting points must always be in line.
3. Sleeve overlap must be at least 250 mm (9,8”).
4. Never use the machine with a damaged PTO protection cover.

4.0 CONNECTING TO THE TRACTOR

Checks prior to connecting the Verti-Core III.

- Check the Verti-Core III for any visual damage, and repair if safe operation of the machine cannot be guaranteed.
- Check whether all nuts and bolts have been tightened properly.
- Check whether all protective covers and safety stickers are in place on the machine, and whether they are undamaged.
  NEVER use the machine without them.

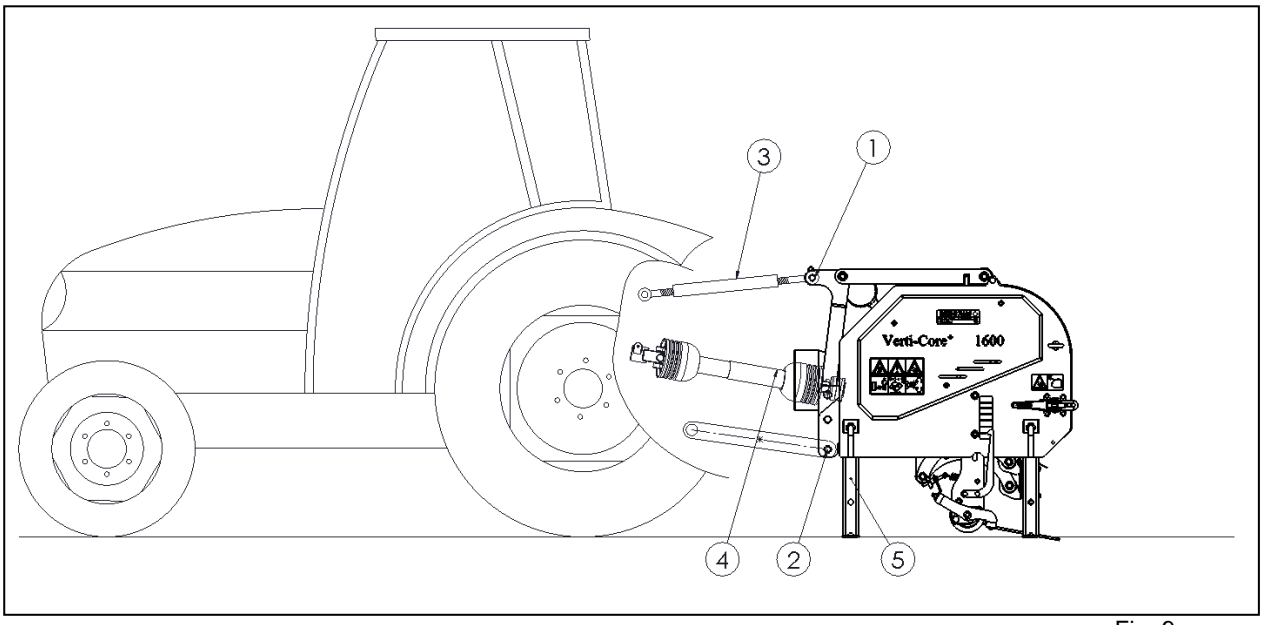

Fig. 9

The Verti-Core III can be connected to the tractor using the 3-point hitch.

The method is as follows: (Fig. 9)

1. Remove the 3-point pins (1 and 2).
2. Mount the PTO on the PTO shaft of the Verti-Core III.
3. Carefully back up the tractor, so that the lifting arms can be connected to the frame.

⚠!! Make sure the tractor is secured in place and cannot start moving!!

⚠!! Switch the tractor off prior to getting off!!

4. Connect the lifting arms to the bottom 3-point pins (2) and secure them using the included locking pins.
5. Set the stabiliser of the tractor to a 100 mm sideways stroke.
6. Mount the top link of your tractor and extend it until it is at the same height as the top 3-point hitch (1) of the Verti-Core III.
7. Connect the top link (3) to the frame using the top pin (1) and secure using the included locking pin.
8. Keep extending/retracting the top link until the machine makes a 90° angle with the ground.
9. Mount the PTO (4) on the tractor's PTO shaft.

⚠!! Make sure all locking pins are secured!!

10. Start the tractor and lift the Verti-Core III off the ground.
11. Place the support legs (5) in the working position.

5.0 SETTING THE WORKING DEPTH

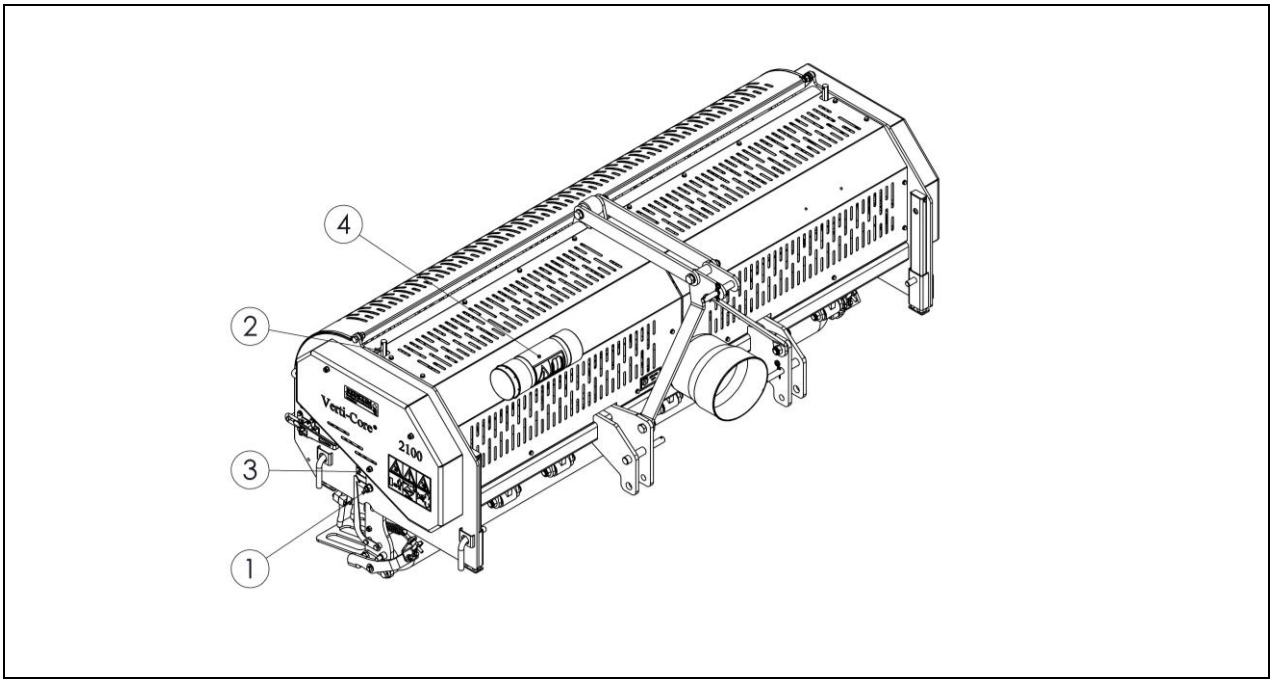

Fig. 10

The working depth can be set when the machine is lifted off the ground. (see Fig.10)

The procedure is as follows:

⚠ **!! Make sure the tractor/Verti-Core III are secured in place, and cannot start moving !!**
⚠ **!! Switch the tractor off prior to getting off !!**

1. Unscrew the nuts (1) on both sides of the machine a few turns.

   ☞ The machine comes with a set of spanners; you can find these in the tool case (4).

2. Set the spindles (2) using the provided spanners, which will change the working depth. Stickers (3) on the side of the machine indicate the depth setting on both sides of the machine.
3. As soon as the right working depth has been achieved, you can tighten the nuts (1) on both sides.
4. Check whether the setting is the same on both sides.

Never change the setting on one side by more than 4 turns. First compensate on the other side, before proceeding.

⚠ **! IMPORTANT!**

Check the working depth first in a static situation on the ground before actually starting the work!

6.0 DRIVING SPEED

Driving speed is limited to 12 km/h (7.5mph).
We advise against going any faster because that could lead to excessive wear and damage to the machine and the treated lawn.

Hole spacing in the driving direction is determined by the driving speed.

The input speed of the PTO shaft must not exceed 540 rpm. If you expect to encounter any hard objects on your path, this speed should be lowered to 200-300 rpm.

☞ Refer to technical specifications for an overview of the relation between tractor speed and hole spacing.

☞ If the Verti-Core III is connected to the tractor incorrectly, Chapter 4, Fig.11, different PTO shaft angles can cause vibrations in the machine's drive shaft. These vibrations can damage the machine and negatively affect the pattern of holes in the ground.

☞ If the PTO shaft length is set incorrectly (too short or too long), the gearbox and/or tractor PTO shaft can be subjected to additional load. This can cause damage.

7.0 STARTING PROCEDURE

The starting procedure is VERY important. If this procedure is not adhered to as described below, the machine can become seriously damaged. The starting procedure is as follows, see Fig. 11.

1. Drive to the spot where you want to start the work.
2. Lower the machine until the lowest tines almost touch the ground.
3. Rev the tractor engine up to about 1000 rpm.
4. Shift the tractor to the right gear and drive forward (A).
5. Switch on the PTO shaft of the tractor (B).
6. CAREFULLY lower the RUNNING machine into the ground as the tractor is moving forward (C).
7. Raise the PTO shaft rpm to the maximum permissible value.

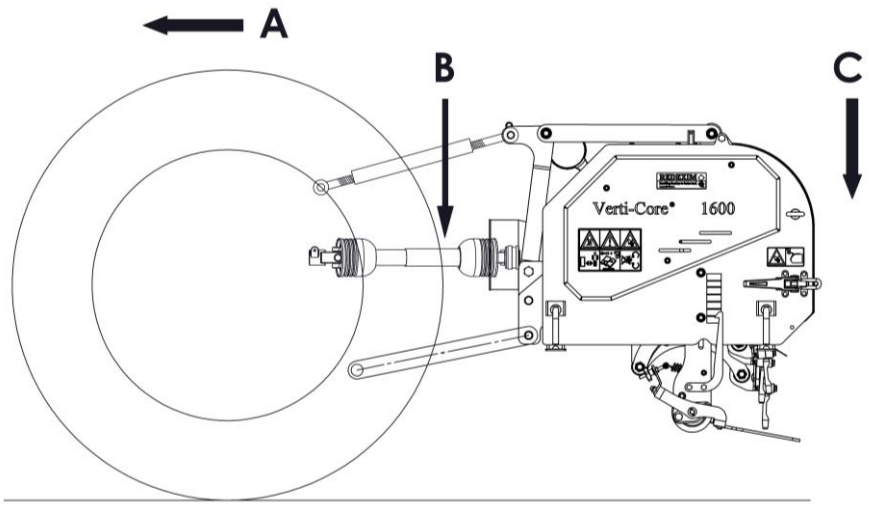

Fig. 11

Stop as follows:

1. Lower the engine rpm to about 1000.
2. Raise the machine from the ground.
3. Disengage the PTO shaft, as soon as the tines are out of the ground.
4. Raise the machine further, until the tines are at least 120 mm above the ground.
5. Go to the next spot and start again as described.

☞ It is absolutely necessary to follow the procedures described above. If the machine is placed in the ground first, with the PTO shaft not yet running, this can lead to serious damage to the machine.

☞ Lower the machine into the ground CAREFULLY.

☞ Be careful when reversing.
During the work, the front roller must rest on the ground in a stable manner. If the machine is unstable, fit different tines or change the working depth.

☞ Not doing anything about machine instability will cause damage to the machine. The machine is NOT protected against prolonged overload.

☞ NEVER reverse with the tines in or near the ground.

☞ NEVER reverse with the tines less than 120 mm above the ground. If the tines touch the ground, the machine and/or the lawn will be damaged.

☞ Do not use a hydraulic top link.

8.0 USING THE VERTI-CORE III

Before the Verti-Core III can be used on a lawn, the following must be checked:

1. Are there any loose objects on the lawn? If so, remove these first.
2. Are there any slopes? The maximum slope on which the machine can function properly is 20 degrees.
   Always work from the top down.
3. Is there any danger of objects flying around, such as balls, which could distract the operator? If so, do **NOT** use the Verti-Core III.
4. Is there any danger of subsiding, sliding? If so, postpone the work until circumstances improve.
5. When the ground is frozen or very wet, the work should be postponed until conditions have improved.
6. Are there any cables/pipes in the ground? If so, find out at what depth they are, and set the working depth to 60% of that depth.
7. Are there any hard objects in the ground? If so, use the Verti-Core III at a low PTO shaft speed, and adjust the working depth.
8. If the ground is very compacted, you should use shorter tines or adjust the working depth.

9.0 TRANSPORTING THE VERTI-CORE III

The user is responsible for the transport of the Verti-Core III behind the tractor on public roads. Check national legislation for regulations for driving on public roads.
Do not exceed a speed of 12 km/h on open fields, due to the weight of the Verti-Core III. Higher speeds can pose a serious danger to the operator/bystanders, and could possibly damage the machine.

⚠ **Make sure the top link (3), see Fig. 10, is connected and tensioned in the conveyor. If this is not case, the machine could sustain serious damage.**

⚠ **When the machine is lifted off the ground, at least 20% of the weight of the tractor must rest on the front axle.**

10.0 DISCONNECTING THE VERTI-CORE III

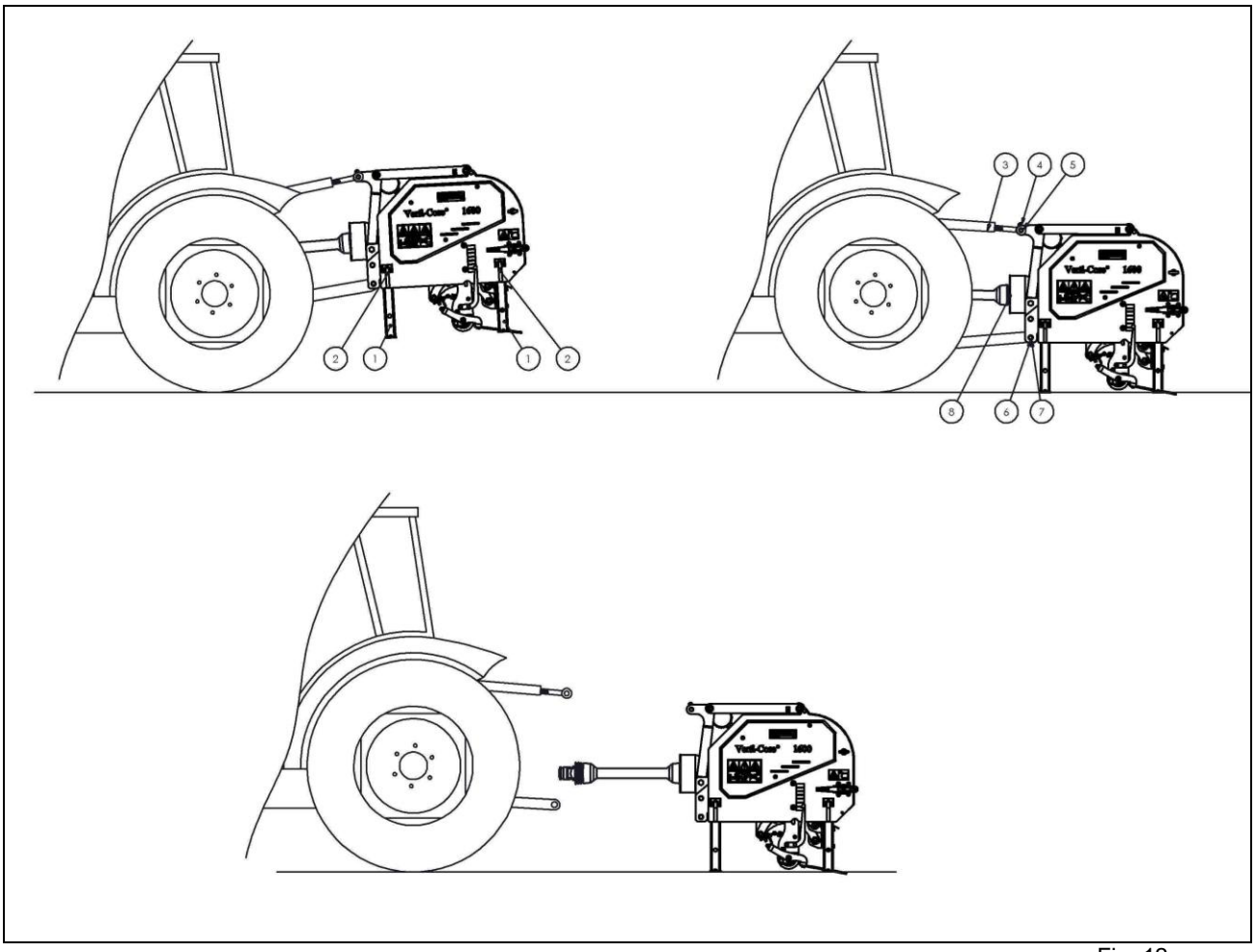

Fig. 12

The machine can be disconnected from the tractor in the following way (See Fig 12):

1. Drive the Verti-Core III to a storage space with a stable/even floor.

⚠ **!! Make sure the tractor is secured in place and cannot start moving !!**

⚠ **!! Switch the tractor off before getting off !!**

2. Turn the locking pins (2) halve a rotation and remove them.
3. Lower the support legs (1).
4. Secure the support legs (1) by replacing the locking pins (2).
5. Carefully lower the Verti-Core III to the ground.
6. Release the top link and remove it.
7. Remove the locking pin (4), remove the top link connection pin (5)
8. Remove the locking pin (7), remove the connection pins (6). Disconnect the bottom lifting arms from the tractor.
9. Disengage the PTO on the tractor side.

⚠ **!! Make sure the Verti-Core III is stable and cannot roll/slide away!!**

10. Start the tractor, and drive it away.

11.0 TROUBLESHOOTING

Machine vibrates	Crankshaft turns irregularly	Machine not at 90 degrees Angles of PTO pivoting points differ
	Difficult conditions	PTO pivoting points not in line Adjust working depth Use thinner/shorter tines In case of dryness, sprinkle first
Hollow tines bend/break	Wrong tine	Change tines, use shorter ones.
	Difficult conditions	First break the ground using another machine. Adjust working depth Use thinner/shorter tines In case of dryness, sprinkle first
Front roller not stable on the ground	Wrong tines, too much resistance	Change tine size Adjust working depth Use different tine size.
	Difficult conditions	Adjust working depth Sprinkle first
PTO breaks	Sleeves crack	PTO angles too big PTO angles do not match
Damage to the lawn	Oval holes	Ground too wet Decrease forward speed Decrease working depth
	Damage to the lawn	Use Turf Hold Down Fingers
Irregular pattern of holes	(One) slipping V-belt	Check V-belt tension
	Rubber buffers worn	Check pretension and replace Change PTO rpm
V-belt/belts slip	V-belts / pulleys worn	Check and replace
	Insufficient pre-tensioning	Check and replace
	Difficult conditions	Adjust working depth Decrease forward speed Use thinner tines

12.0 MAINTENANCE

Before start-up:	Check bolts/nuts Connect machine to a tractor Allow the machine to idle for 5 minutes. Mount the tines	See instructions user manual Look and listen See Chapter 15, Options
Weekly	Check gearbox oil level Clean the machine	
After **first** 20 working hours (new or repaired)	Lubricate PTO and roller bearings Check bolts/nuts Check V-belt tension	2 shots with EP 2
After **first** 100 working hours (new or repaired)	Lubricate PTO and roller bearings Check bolts/nuts Change gearbox oil Check condition and tension of V-belts	2 shots each EP 2 Use 80W-90 GL5
After **every** working 100 hours	Lubricate PTO shaft and roller bearings Check bolts/nuts Check the machine Lubricate front roller spindles Check V-belts	2 shots each EP 2
After **every** 500 working hours	Change gearbox oil	Use 80W-90 GL5

12.1 SPECIFIC BEARING REPLENISHMENT SCHEME

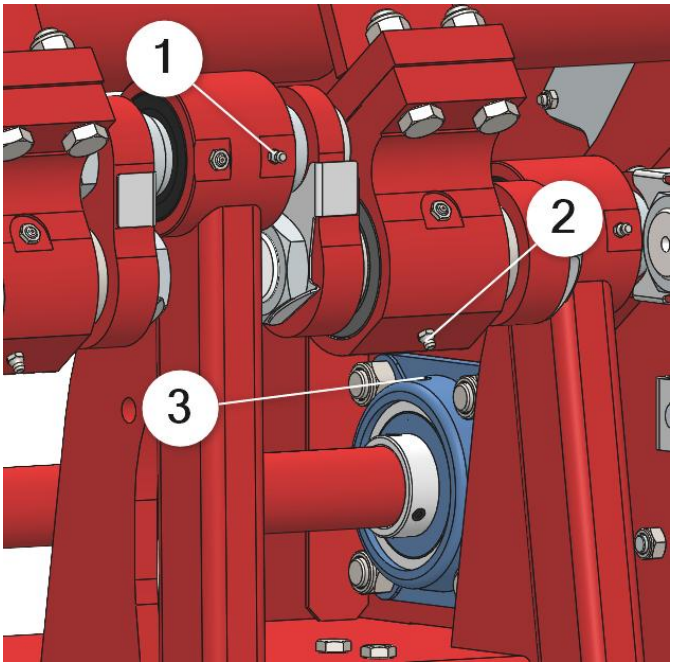

Bearing	Replenishment time schedule	Grease amount MP bearing grease
1	100 h	2.6 g (approx. 3 pumps with grease gun)
2	100 h	4.6 g (approx. 5 pumps with grease gun)
3	100 h	2 g (approx. 2 pumps with grease gun)

13.0 LUBRICATION POINTS

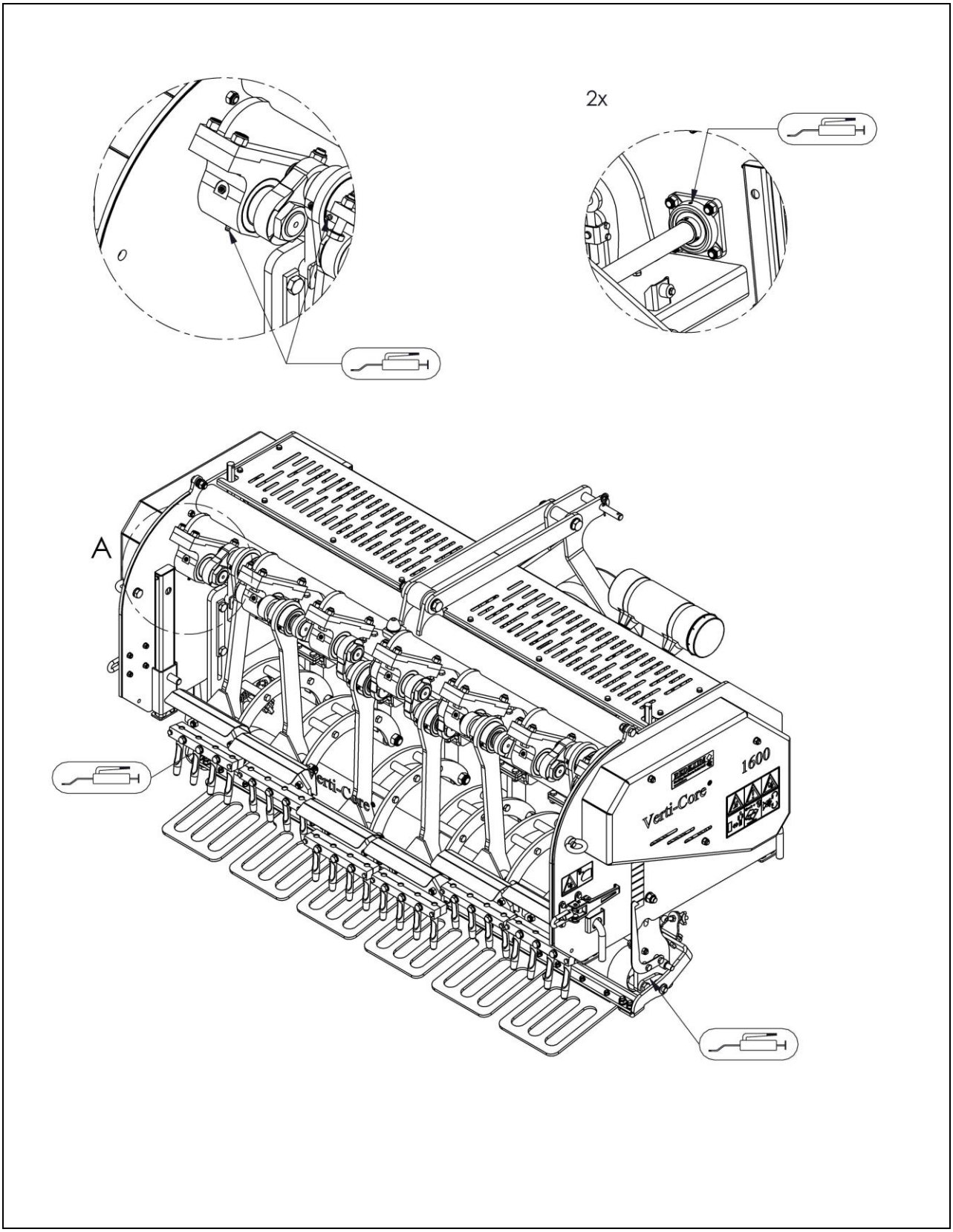

Fig 13

14.0 V-BELT TENSIONING

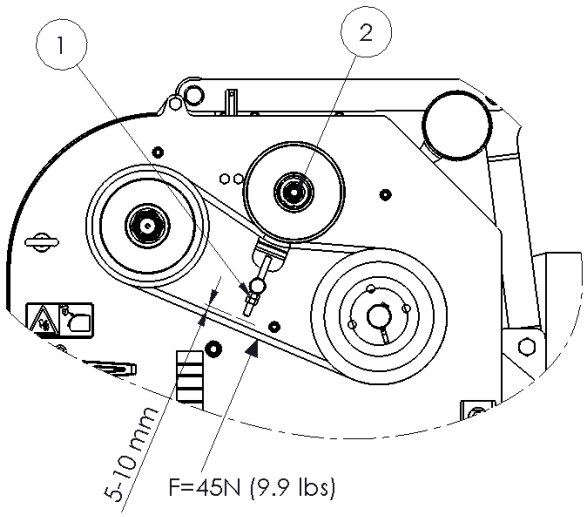

Fig. 14

V-belt tension is important and has to be checked regularly. It is also important to regularly clean v-belts and pulleys whenever required.

Belts should be checked and adjusted one by one in the following way:

☞ **Check whether the tractor engine is switched off and the machine is firmly placed on the ground.**

1. Remove the protective cover
2. Apply a force of 45 N (9.9 lbs.) on the centre of the bottom part of the belt, see Fig.14.
3. You should be able to squeeze the belt 5 mm (1/5“).
4. If not, adjust the belt tension.
5. Unscrew the nut (2) at the front of the tensioner.
6. Turn the nut (1) until you reach the right tension.
7. Tighten the nut (2).
8. Fit the protective cover on the machine.

☞ **When a v-belt needs to be replaced, always replace all v-belts on the machine!! This to prevent different v-belt length and different belt speeds. Different belts can cause extra wear of the v-belts.**

15.0 TECHNICAL INFORMATION

The Verti-Core III is generally not a complicated machine. A number of technical items will be explained further. If you still have questions after that, you should contact your dealer, who will be happy to help you.

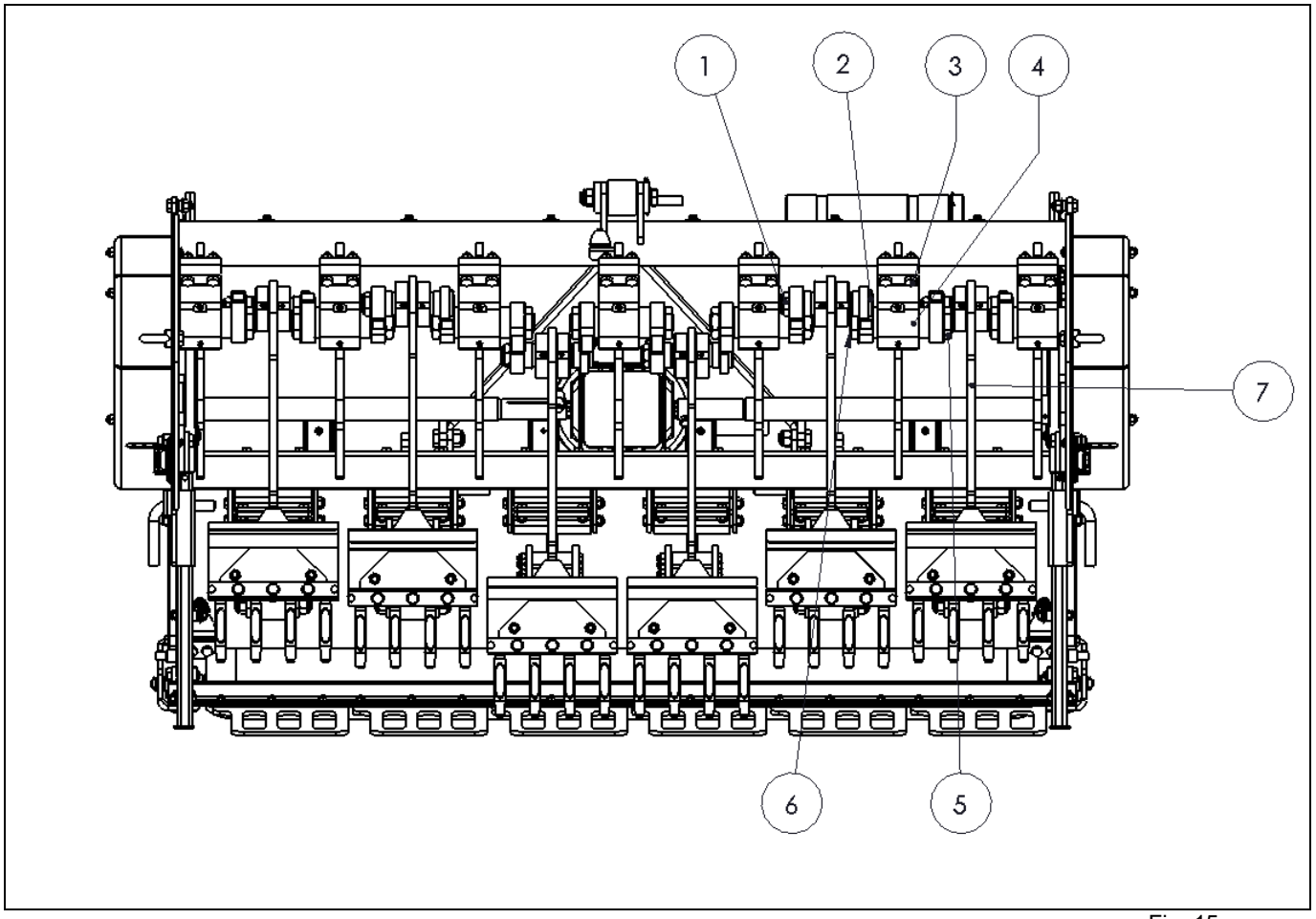

Fig. 15

Figure 15 depicts the structure of the crankshaft. Also check the parts page for more detailed drawings.

15.1 REPLACING A CRANK/CONNECTING ROD BEARING

A crank must be replaced when it has cracked or when the nuts of the big-end regularly come loose, i.e. the connection rod bearings, connection rod bearing fittings or the big-end pin holes in the crank are damaged. Replace the crank/bearings as soon as possible, in order to avoid any further damage to other parts, and do so as follows (see Fig. 16):

1. Remove the big-end nut (1) and big-end pin (2) from the driving rod (7) on both sides of the bearing (4).
2. Drive rod (7) is now detached.
3. Remove the nuts (3) from the bearing (4), and remove the bearing (4), including crank elements, from the machine.
4. Remove nut (5) and beam axle (6).
5. Remove the bearing from the beam axle (6).
6. Replace defective parts and follow reverse order to reassemble the machine.

☞ **Use Loctite for nuts (1) and (3).**

15.2 RELEASING CRANKSHAFT TENSION

When crankshaft parts have been replaced, the shaft can run less smoothly. This can be down to pretensioning. These tensions have to be released. Act as follows, see Fig. 15:

1. Unscrew the nuts (3) of the bearings (4) a few turns.
2. Next, tighten the bearings one by one from one direction.
3. Check after each bearing whether the crankshaft runs smoothly and has no play.

☞ After repairing the crankshaft, nuts must be checked for looseness regularly.

☞ Mount the cranks in the right way; refer to the parts page for the right order and part numbers.

15.3 TIMING AND TORQUES

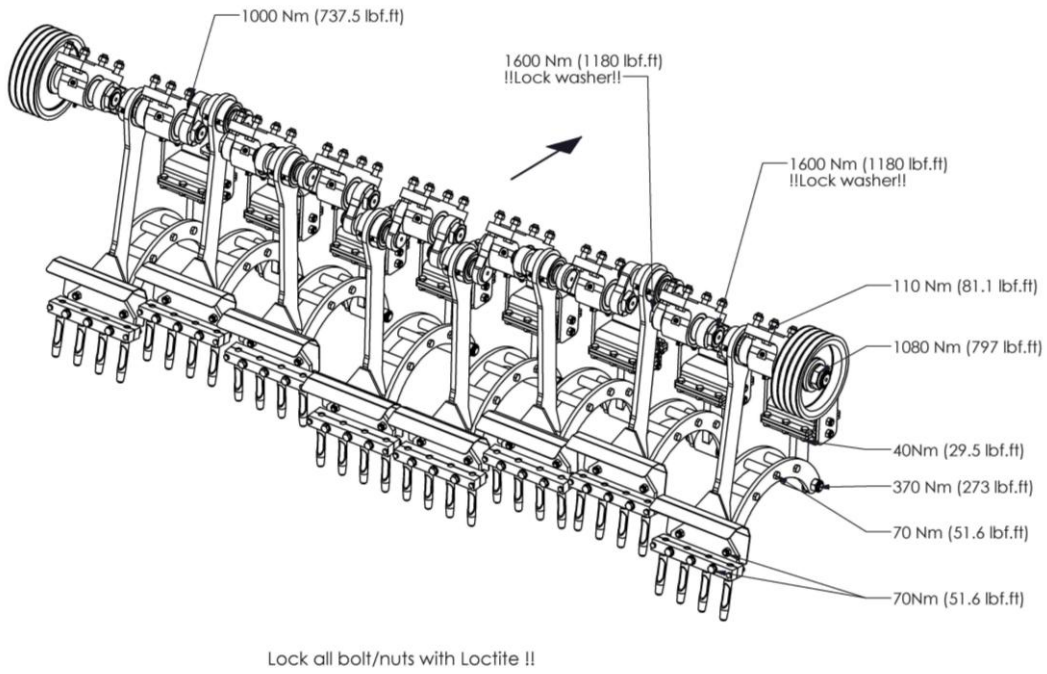

Fig. 16

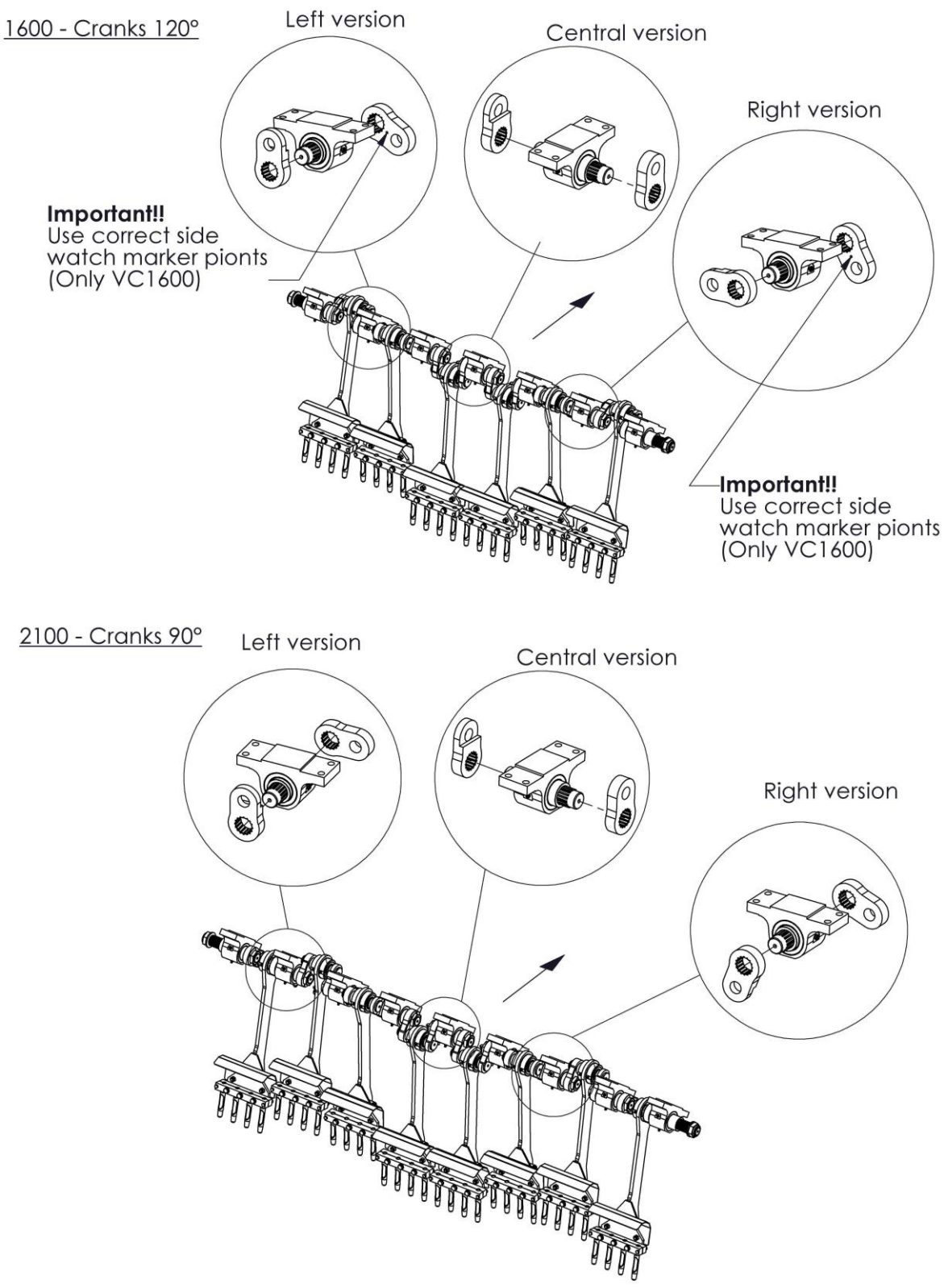

Fig 17.

Fig. 16+17 shows the torques of the most important nuts/bolts.
Make sure that bolts and nuts for which the torque is not shown here, are tightened with the same tightening torque as similar bolts and nuts. When bolts and nuts come loose, you can use Loctite to tighten them.

16.0 OPTIONS

The Verti-Core III is intended as a hollow core machine.

Always use tines with the same length and thickness. Replace bent tines right away. If you fail to do so, the machine can become unstable. Do not use tines that are thicker and longer than specified in the technical specifications.

Shorter (worn) tines can be used in cases where less working depth is required. Remember that the depth indication on the sticker is only correct when using maximum length tines.

We recommend leaving the core guide plates (2) on the machine at all time, in order to protect the machine against dirt. The pages listing spare parts provide part numbers of the different parts.

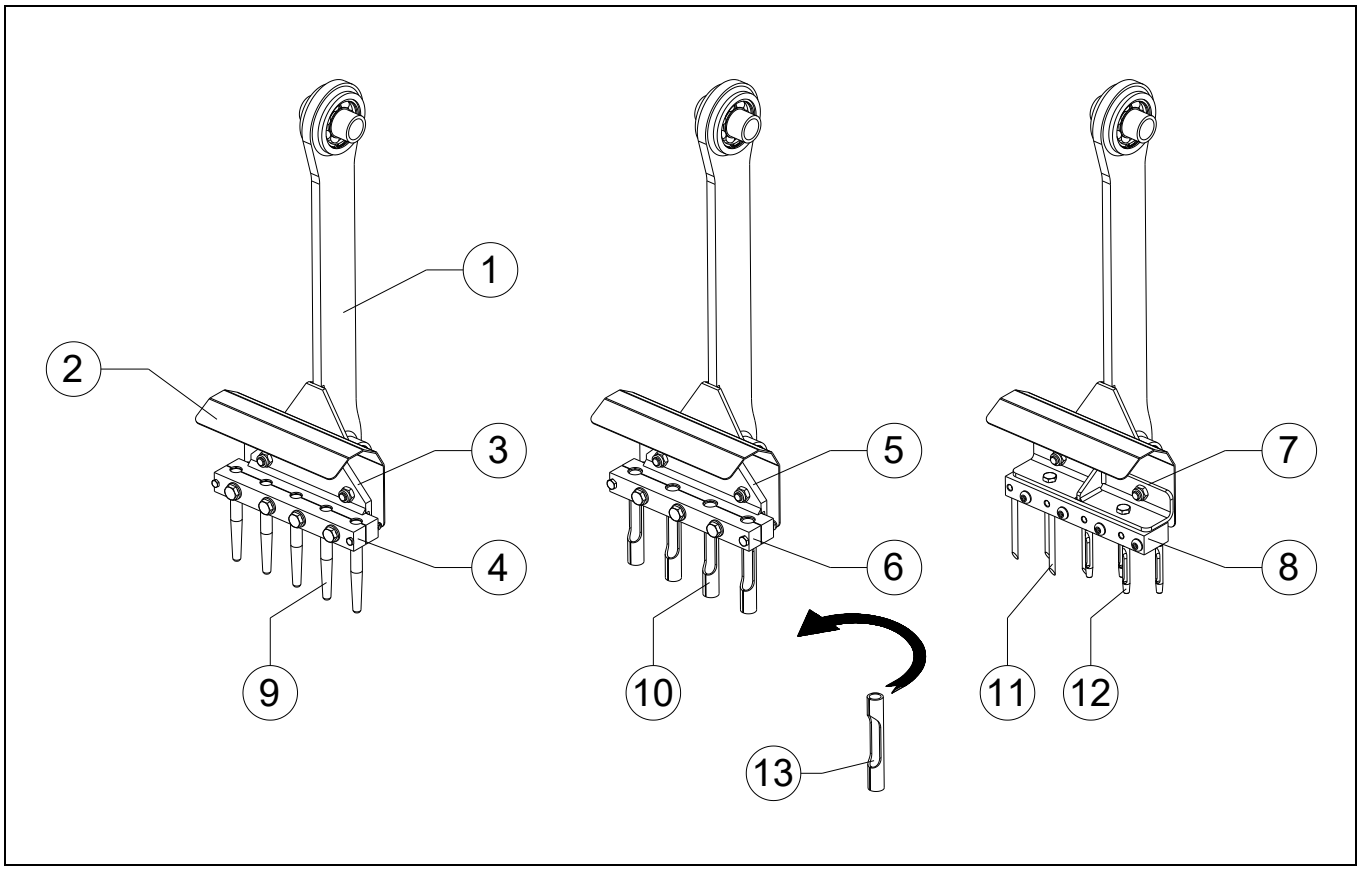

Fig. 18

16.1 HOLLOW TINES

The opening of the tine (13) must always face the back of the machine, see Fig. 16.

If stones are expected in the lawn, you should use heavier hollow tines, as well as decrease the rpm, given that lighter hollow tines are more prone to bending.

The machine is supplied with 19mm (3/4”) tine blocks (3+4) with 5 tines (9) per block as standard.
There is also the option of 7/8” tine blocks (5+6) with 4 tines (10), or multi tine blocks (7+8) with 8 tines (11 or 12) per block.

16.2 TURF HOLD DOWN FINGERS

Turf hold down fingers for standard tine holders are mounted on the machine as standard. There are also other turf hold down fingers available for heavier tines.

☞ The machine has to be at right angles to the ground, see Fig. 9.

☞ When plates have bent in one and the same direction after a period of being in use, you can simply attach them the other way round.

⚠ Be careful when installing the turf hold down kit. Especially the first time, when plates have to be aligned with the tines. **The machine must be stable and firmly on the ground.**

The pressing force of the turf hold down fingers can be adjusted by adjusting the spring tension, see Fig. 19.
Adjust the star knob (2) and fix it with counter nut (1).

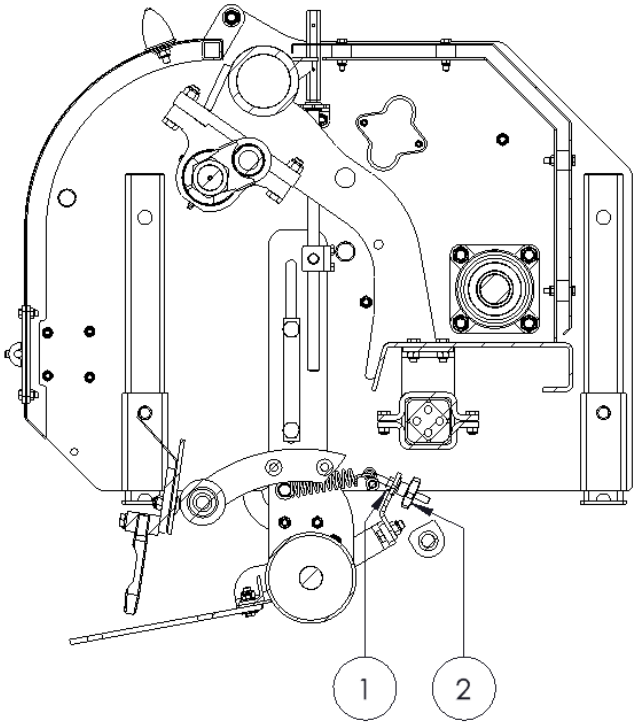

Fig. 19

16.3 WINDROW KIT

When aerating using hollowing tines, cores are removed from the ground. The Windrow kit ensures that these cores are subsequently gathered so that they can be removed easily after working on the lawn. This kit is available under number:
- 212.160.018 -> Verti-Core III 1600
- 212.210.002 -> Verti-Core III 2100