User manual and Parts book

Rink®
Model H1500

Serial number:

Kwekerijweg 8
3709JA Zeist
The Netherlands
T: (31)306933227
F: (31)306933228
E: verti-drain@redexim.com
www.redexim.com

Translation of the original operating instructions

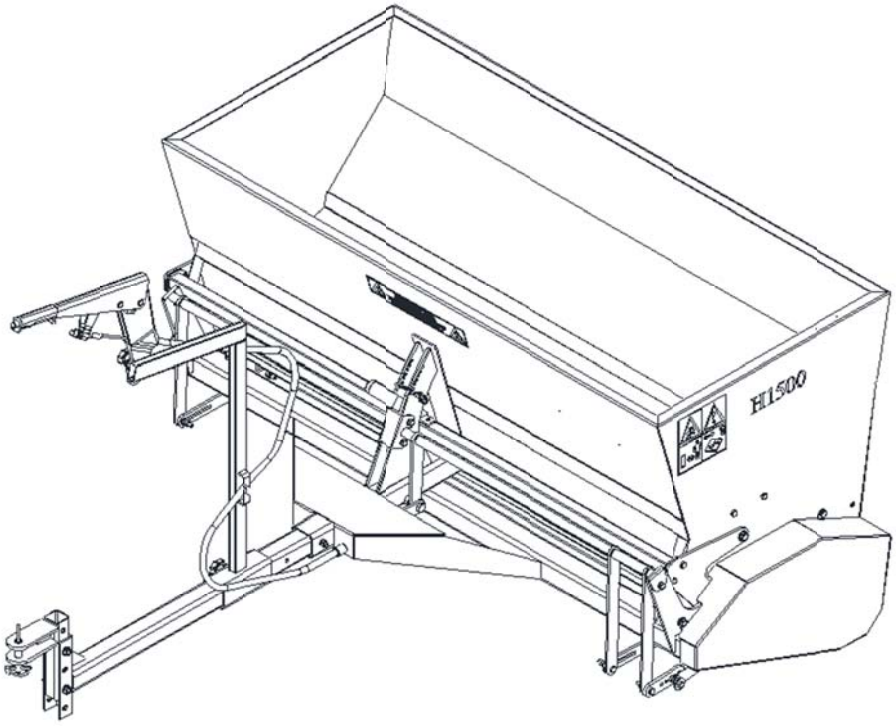

ATTENTION:

IT IS OF THE UTMOST IMPORTANCE TO READ THIS USER MANUAL CAREFULLY PRIOR TO USING THE RINK H1500 IN ORDER TO USE THE MACHINE SAFELY AND TO OBTAIN THE BEST RESULTS.

1703 English 933.120.424

EC DECLARATION OF CONFORMITY

Manufacturer's (or Importer's) Certificate of Conformity
RINK – Roller Spreader H1500

The undersigned

Rink Spezialmaschinen GmbH
88279 Amtzell
Deutschland/Germany

hereby declares that the machine specified below complies with all relevant provisions of the **Machinery Directive (2006/42/EC).**

1. Machine - designation	**RINK – Roller Spreader H1500**
2. Manufacturer or importer	**Rink Spezialmaschinen GmbH** **Alfons-Stübe-Weg 4** **88279 Amtzell**
3. Model:	**H1500**
4. Machine Serial Number:	
5. Build Year:	2015

Amtzell, 18.01.2017 Uli Bachmann

TABLE OF CONTENTS

EC DECLARATION OF CONFORMITY 2
SAFETY REGULATIONS 4
SAFETY REGULATIONS 5
BRIEF DESCRIPTION 6
TECHNICAL DATA 6
FIRST START-UP 6
OPERATION 6
BEFORE EVERY TRAVEL: 6
Loading 6
Attachment and Detachment 7
Driving 8
Operating controls ..... **Fout! Bladwijzer niet gedefinieerd.**
Spreading 9
Setting the spreading thickness 9
CARE AND MAINTENANCE 10
General Information 10
Lubricating bearings with multi-purpose grease (after every 50 hours of operation) 10
Belt drive 11
Slider 11
Problem solving 12
SPECIAL EQUIPMENT 13
Extra brush (to work the spreading material into the surface) 13
Operating the extra brush 14
Replacing the sweeper bar 14

Subject to technical changes.

Equipment marked with # is only available as special equipment.



SAFETY REGULATIONS



- The **RINK – Roller Spreader H1500** is exclusively designed for spreading fine-grain, loose gritting material such as sand, gravel, rubber granules or similar.

- Any other use is considered to be improper. The manufacturer is not liable for any damages incurred as a result. The risk is borne solely by the user.

- The intended use also includes strict compliance with the operating, maintenance and repair requirements specified by the manufacturer.

- The **RINK – Roller Spreader H1500** has been constructed using state-of-the-art technology and is safe to operate. However, the **RINK – Roller Spreader H1500** may pose dangers to a user's or another person's life and limb if the machine is not used, maintained and repaired by authorized persons who are familiar with it and have been instructed in the hazards involved.

- Any person in the operator's company who has been commissioned to operate, service and repair the spreader must have read and understood the operating instructions and, in particular, the section **Safety Regulations**.

- Use only **original manufacturer spare parts** for repairs.

- Besides the instructions contained in this operating manual, the general **safety and accident prevention regulations** are to be observed.

- The **RINK – Roller Spreader H1500** may **travel on public roads** when a lighting system is installed.

- Transportation of persons is not permitted !

- **Keep off the loading bridge whilst the spreader is running.** A corresponding notice has been affixed on both sides of the **RINK – Roller Spreader H1500**. These notices must always be legible and must be replaced when damaged. (See Spare Parts)

- The operator is **obliged** to inspect the **RINK – Roller Spreader H1500** for **visible signs of damage and defects** before operating the machine. Any changes to the **RINK - Roller Spreader H1500** (including to its operation), which may have a negative impact on safety, must be rectified immediately. For safety reasons, it is strictly prohibited to make any changes or additions to the **RINK – Roller Spreader** (except for changes/additions which have been approved by the manufacturer). If any modifications to the **RINK - Roller Spreader H1500** are carried out, the CE marking currently valid for the machine will become invalid. The person who has made these modifications will be responsible to independently apply for the renewal of the CE marking.

SAFETY REGULATIONS

- The permissible support load of the towing vehicle must be observed.
- Before starting the engine, check the immediate surroundings and ensure adequate visibility.
- No persons should be within the danger zone of the spreader during operation because of the risk of injury from rotating parts and flying debris.
- Make sure to wear suitable clothes. Wear safety shoes and long trousers. Long hair must be tied back. Do not wear loose items of clothing. Use appropriate personal protective equipment in accordance with applicable health and safety regulations
- The noise level generated near the **RINK – Roller Spreader H1500** is 74 dB (a).
- Wear certified hearing protection when working with the machine.



- Adjustment and repair work may only be carried out by authorized personnel.

Waste oil endangers the environment. Please dispose of it in an environmentally friendly manner.

BRIEF DESCRIPTION

The **RINK – Roller Spreader H1500** is exclusively designed for spreading fine-grain, loose gritting material such as sand, gravel, rubber granules or similar. The spreading unit of the **RINK – Roller Spreader H1500** is driven by a V-belt. The spreading thickness is adjusted via a mechanical slider. This allows the gritting material to be dosed accurately.

TECHNICAL DATA

Dimensions of the RINK – Roller Spreader H1500

Length ..... 1.85 m
Width ..... 1.60 m
Height ..... 1.10 m

Load quantity ..... 0.40 m^3

Weights

Permissible total weight ..... 750 kg
Dead weight ..... 180 kg

Layer width ..... 1.50 m

Tires ..... 4 x wheels 13x6.50-6 4PR

Tire pressure ..... 1.50 – 1.75 bar

The identification plate is located on the right-hand side, on the front of the spreader, in the direction of travel.

FIRST START-UP

- Retighten wheel nuts.
- Check tire pressure.



Recheck these points after the first travel with load !

OPERATION

BEFORE EVERY TRAVEL:

- Check the **RINK – Roller Spreader H1500** for visible defects and, if necessary, rectify them.
- Check the tire pressure.

Loading

- Observe the desired maximum ground pressure.
- When loading, pay attention to the permissible total weight.

Attachment and Detachment

In order to obtain the best spreading results, the **RINK – Roller Spreader H1500** must be mounted as parallel as possible to the ground. To do this, proceed as follows:

- When the screw (7) and the nut (8) are removed, the drawbar (1) can be pulled out to the required length.
- Adjust the trailer hitch (2) to the height of the towing vehicle by loosening the screws (9) and nuts (10) in position (A) or (B).
- Remove bolt (5) and linchpin (6) to be able to hook the trailer. After the machine has been hooked to the towing vehicle, install the bolt (5) and secure it with the linchpin (6)
- By releasing the star knob (11), the holder for the rope hoist (3) can be precisely adjusted.
- It is also possible to attach the drive lever brake (4) directly to the towing vehicle. To do this, loosen the star knob (12) and attach the plug brake lever to the towing vehicle. Then fully turn in the star knob (12).

Detach in reverse order !

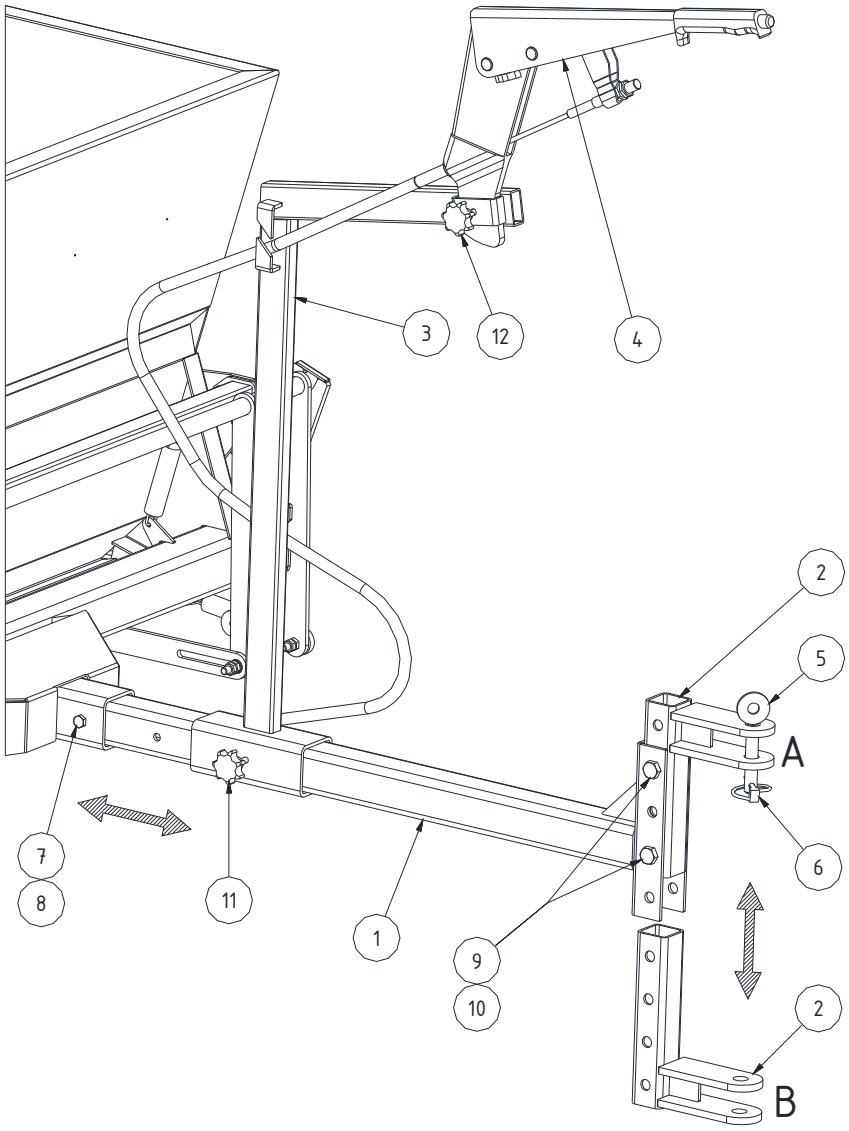

Fig. 1: Attachment and Detachment

Driving

Operating controls

The roller spreader and the slider are operated as follows:

- When in the lower position, the plug brake lever (1) is fully undone (V-belt is tension-free) and the roller spreader is not actuated. The slider is closed.
- The slider opening is adjusted by means of the R-clip (2). (See page 9)
- Pull the plug brake lever (1) upwards in the direction of the arrow to turn on the roller spreader and to open the slider.
- Actuate the plug brake lever (1) whilst driving. Spreading is only possible whilst driving.
- Release the plug brake lever (1) in the direction of the arrow to turn off the roller spreader and to close the slider.

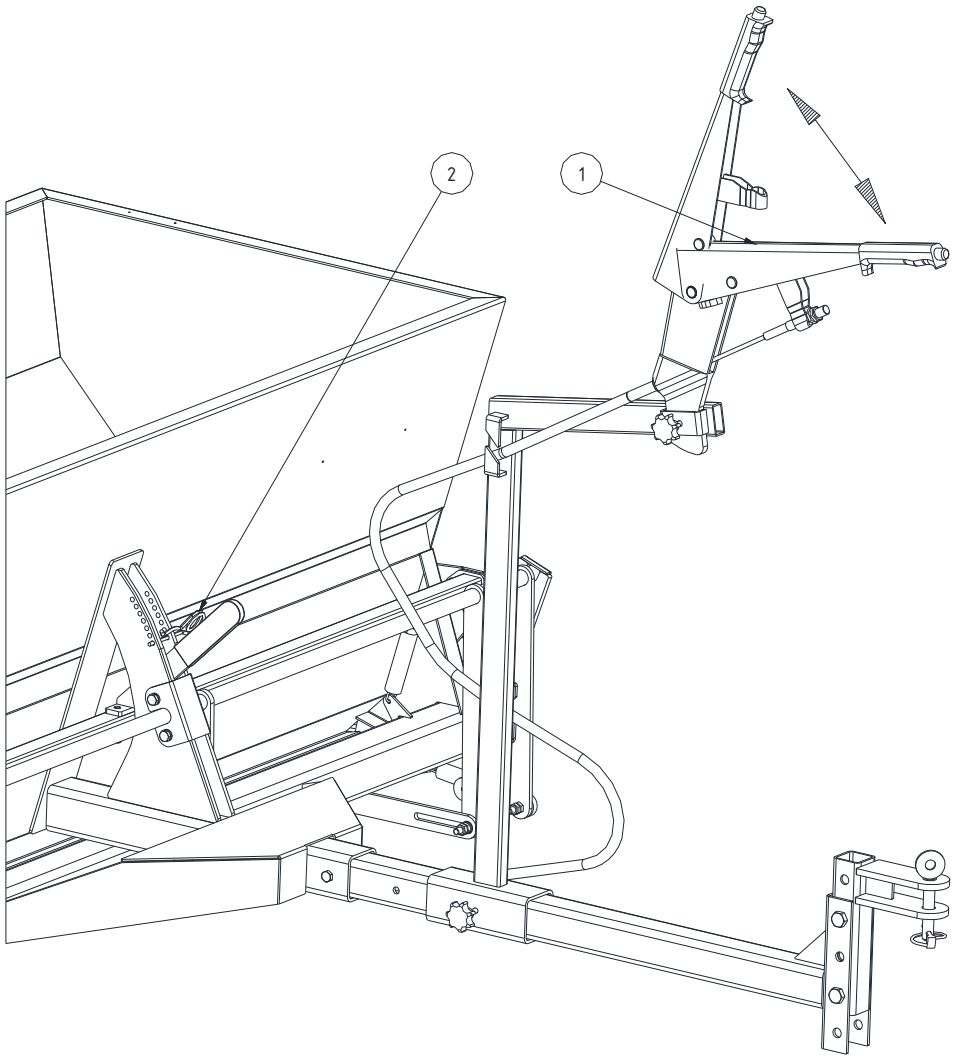

Fig. 2: Operating controls

The machine must be turned off (plug brake lever down) when driving reverse.

A plug brake lever that is not fully released will lead to permanent actuation. The slider will not close.

Spreading

Setting the spreading thickness

Set the desired spreading thickness whilst on a firm surface before starting to work. The spreading thickness or spreading quantity depends on the driving speed of the towing vehicle and the slider opening. This can be adjusted by setting the R-clip (2) to different positions.
In order to spread as much material as possible, the R-clip (2) is pushed into the upper position (X) and the slider is fully open.
In order to reduce the spreading quantity, the R-clip (2) can be put into the variable (Y-) direction.

- **A faster driving speed results in a more evenly spreading pattern.**
- **The slider opening should be smaller for finer spreading material.**

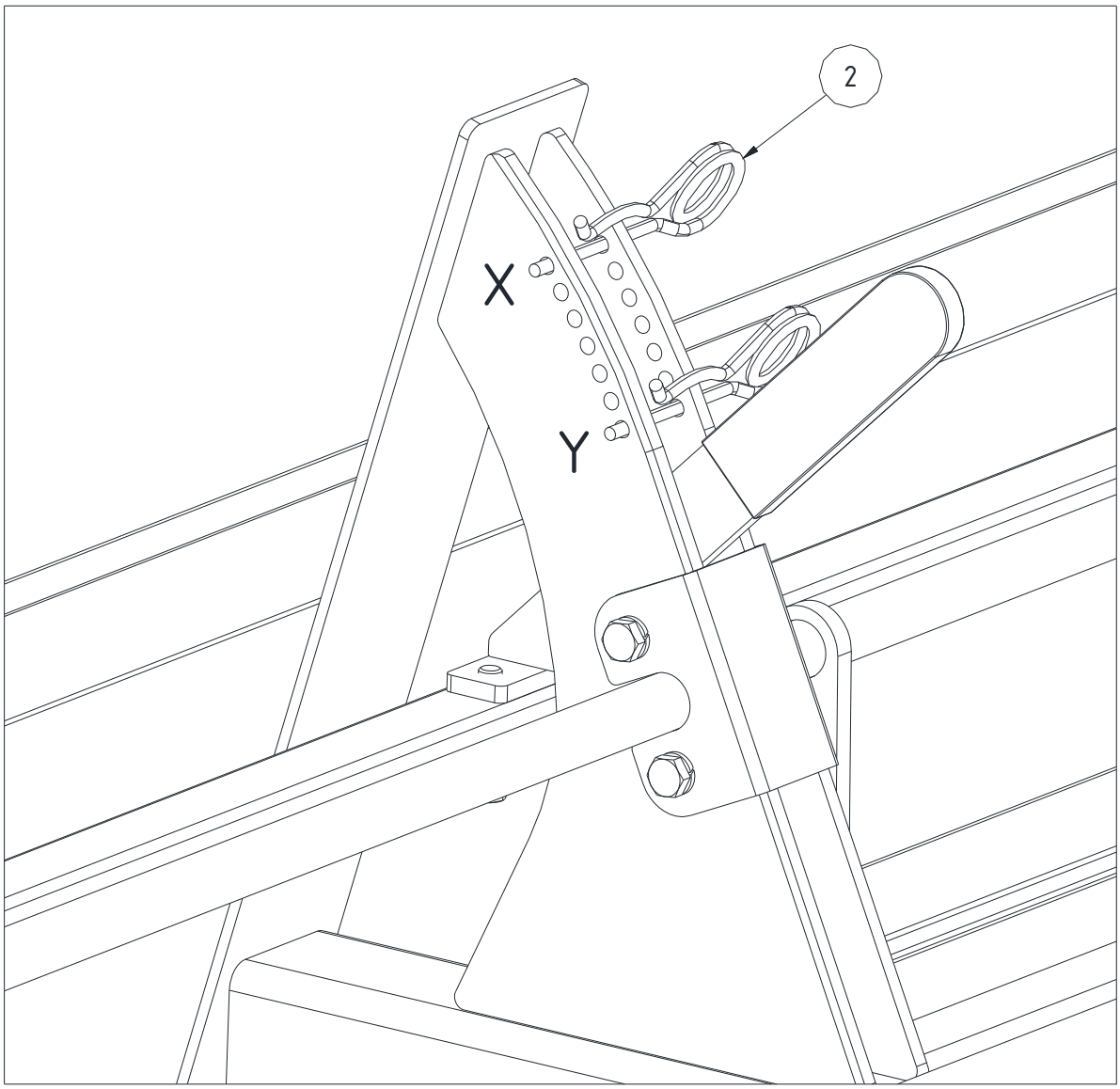

Fig. 3: Setting the spreading thickness

CARE AND MAINTENANCE

General Information

- Periodically check the **RINK – Roller Spreader H1500** for faulty parts.

Lubricate bearings with multi-purpose grease (after every 50 hours of operation)

Remove the protective cover (1) by undoing the screws (2) in order to lube the bearings (3).

(4) Bearings on both sides of the roller spreader

(5) Bearings on both sides of the drive shaft

(6) Bearings on both sides of the carrying axle

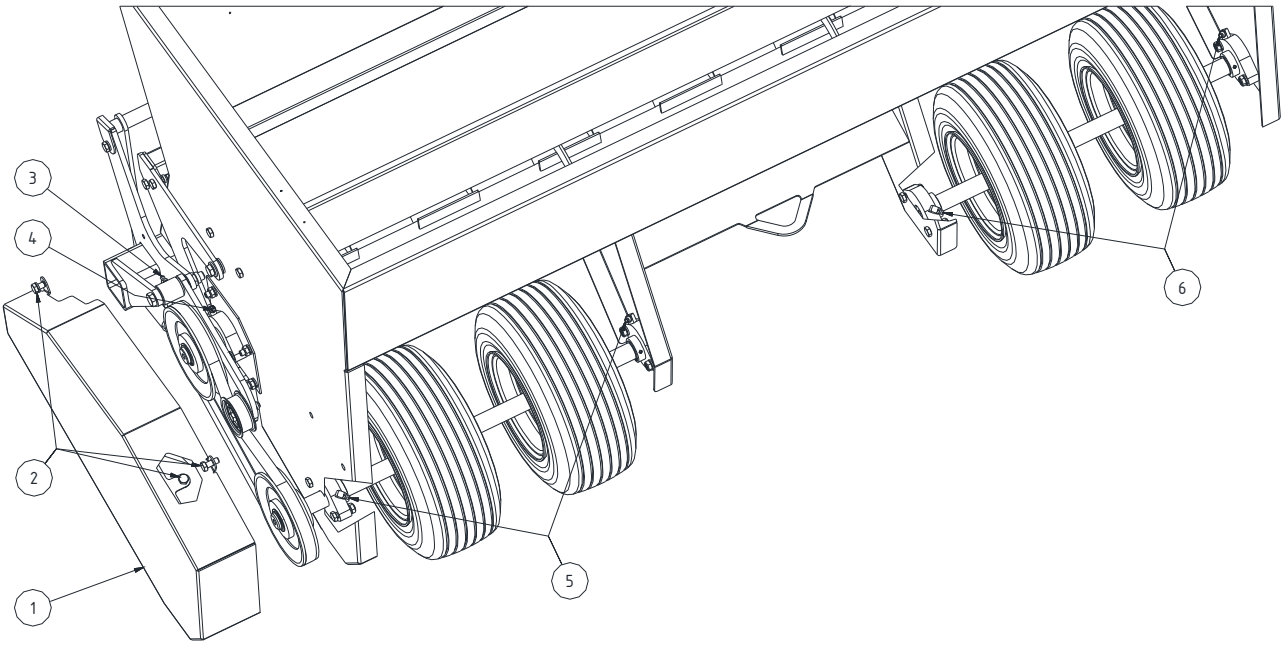

Fig. 4: Lubricating bearings

Belt drive

The V-belt (3) can sag during the spreading process. The belt tension is readjusted by means of the tension spring (7) as follows:

- Turn the fixing screw (5) into the position (V) on the spring lever (6) and hook in the tension spring (7)
- The tension spring (7) can also be adjusted (W) on the belt tensioner (4).

Check the pulling force of the tension spring (7) regularly and replace if necessary.

The V-belt must be relaxed when the plug brake lever is in the lower position. The V-belt tightens only when the spreader starts. (See page 8)

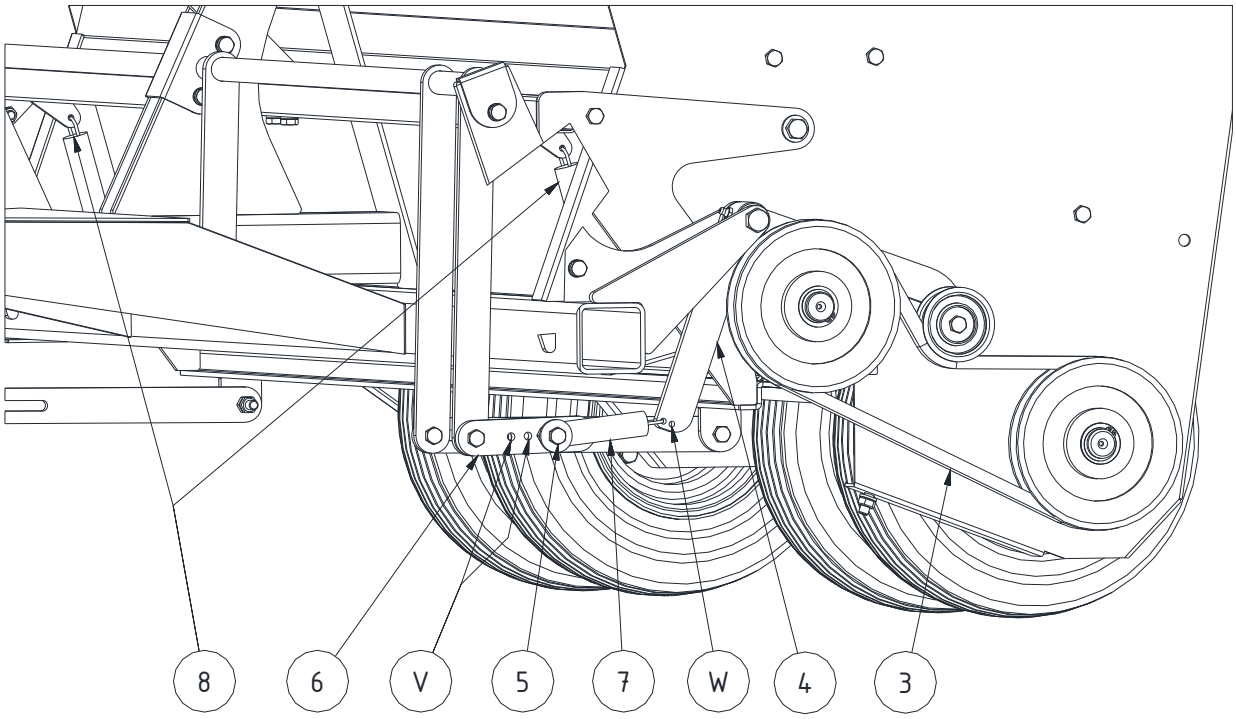

Fig. 5: Tightening the belt

Slider

If the slider fails to close properly, the pulling force of the tension spring (8) may not be sufficient. Replacement is necessary and done as follows.

- Unhook the tension spring (8) on both sides of the slider and replace with a new one.

Check the pulling force of the tension spring (8) regularly and replace if necessary.

Problem solving

Problem	*Cause*	*Solution*
The roller spreader is not moving	Belt is faulty. Tension spring of belt drive is faulty.	Check the belt drive (see page 11) Replace tension spring (see page 11)
Slider does not open at all or not enough.	Slider opening is too small. Slider rod system is jammed.	Change the position of the R-clip (see page 9) Slider rod system must be flexible (check locknuts)
No material comes out of the machine	Slider is closed The roller spreader is not moving	Check and open the slider (see pages 8 and 9) Check the belt drive (see page 11)
Spreading thickness is too thin	Quantity of material conveyed is too little	Increase the size of the slider opening (see page 9)
Spreading thickness is too thick	Quantity of material conveyed is too much	Decrease the size of the slider opening (see page 9)
Slider fails to close	Tension spring of the slider is faulty	Replace the tension spring (see page 11)

Fig. 6: Analysis of the problem

SPECIAL EQUIPMENT

Extra brush (to work the spreading material into the surface)

By installing the extra brush on the **RINK – Roller Spreader H1500**, material is spread and worked into the surface within one working cycle:

- Drill out the notches (Z) on the spreader using Ø 6.5 mm and mount the stop plate (2) with the screws (7) and nuts (10) supplied.
- Mount the brush lever (1) on both sides using the supplied screws (5), clamping washers (11) and nuts (8) to allow for movement without play. Thus the brush can be raised, lowered and adapted to the surface.

Remove in reverse order !

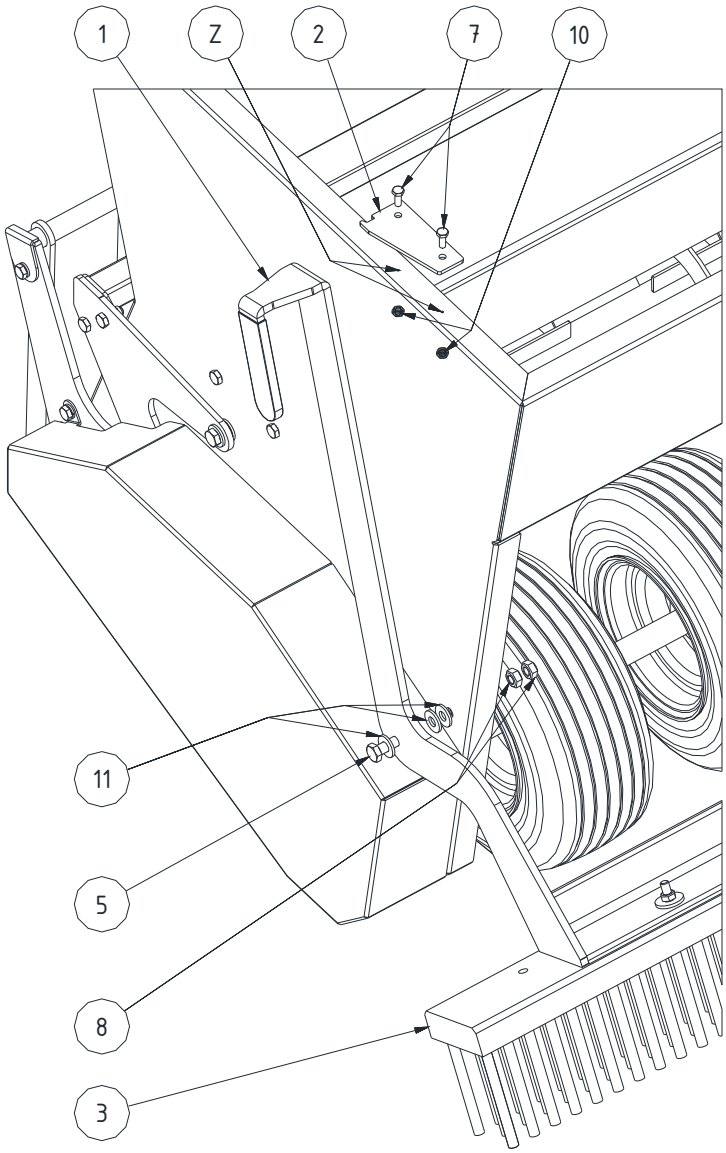

Fig. 7: Mounting the extra brush

Operating the extra brush

Turn the extra brush downwards to work the spreading material into the surface.

Raise the brush during transport and reversing !

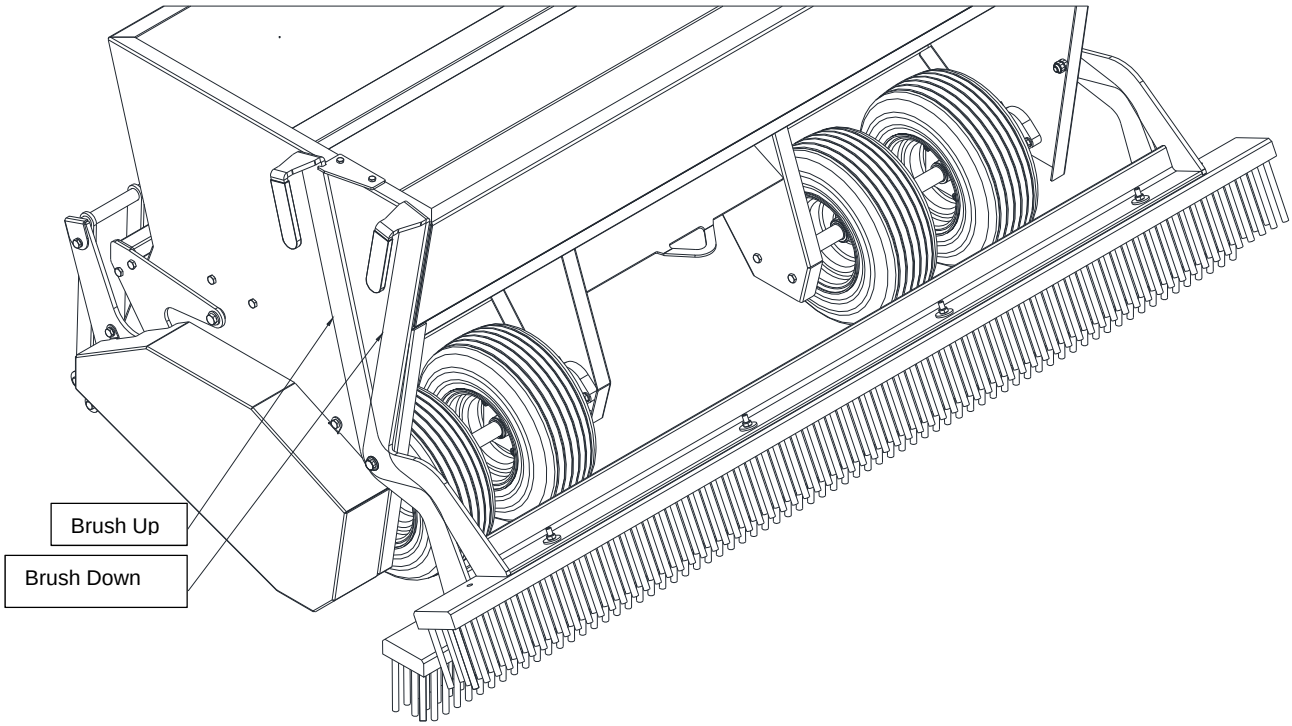

Fig. 8: Operating the extra brush

Replace the sweeper bar

Depending on the load and operating time of the **RINK – Roller Spreader H1500**, the sweeper bar (3) (s. page 13) can wear out. For replacement proceed as follows:

- Remove the brush lever (1). (See page 13)
- Remove the sweeper bar (3) from the brush lever (1). (See page 23)
- Centre the new sweeper bar (3) on the brush lever (1) longitudinally and transversely, and fix in place with screw clamps. (See page 23)
- On the brush lever (1), at the brush side between the bristles, drill out holes of Ø 8.5 mm for the sweeper bar (3). (See page 23)
- Be careful when drilling that no bristles are damaged.
- Then mount the sweeper bar (3) using screw (6), washer (12,13) and nut (9). (See page 23)
- Attach the brush lever to the container. (See page 13)